LOOK+

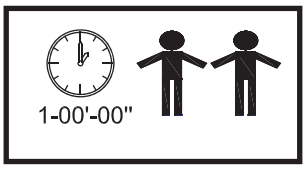

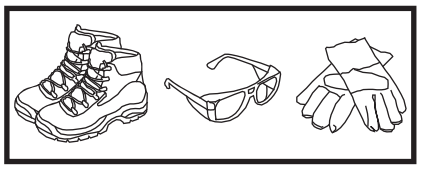

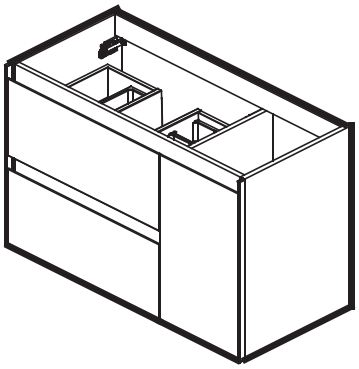

90

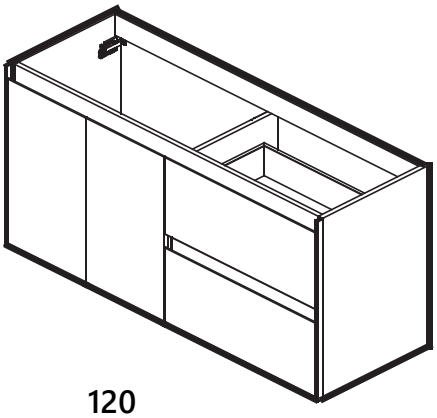

120

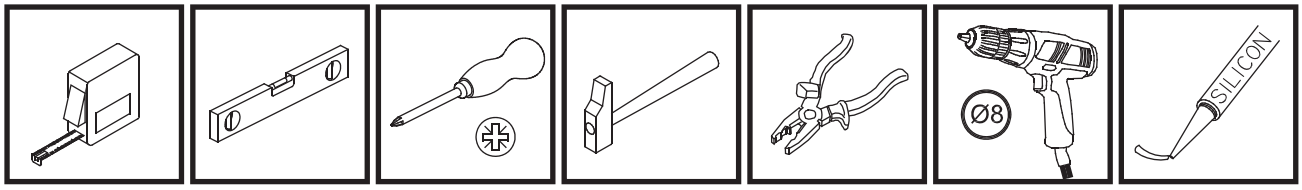

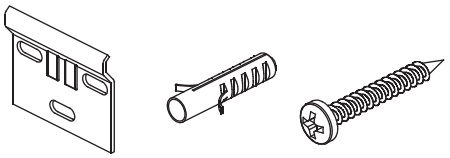

x3 x6 x6

BO-719

01.

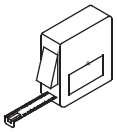

cms.

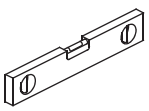

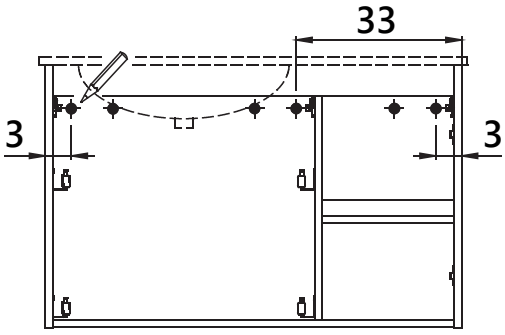

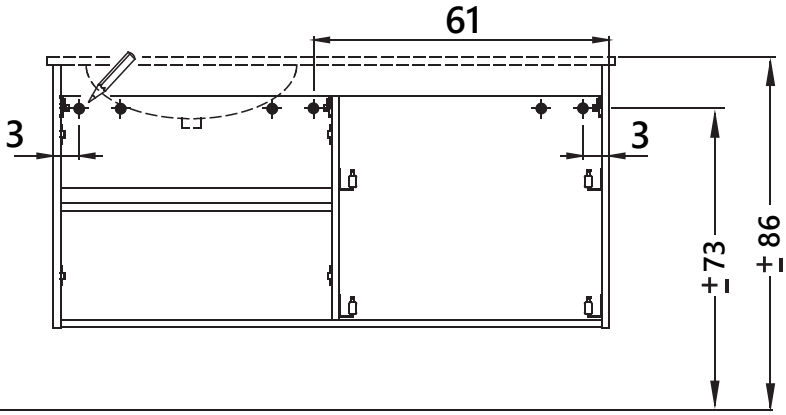

90 120

02.

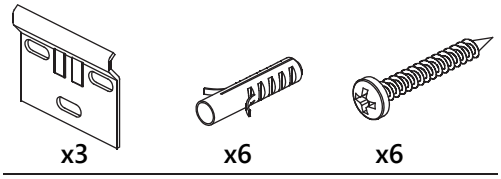

BO-719

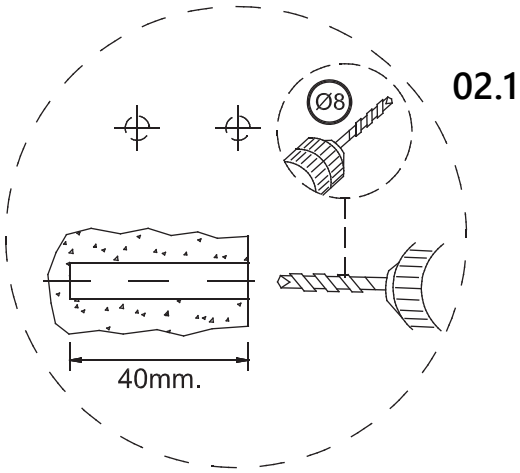

02.1

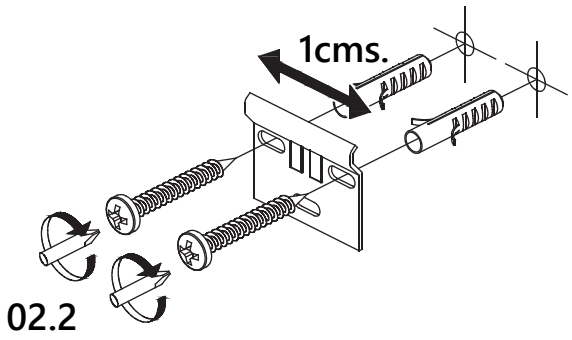

02.2

03.

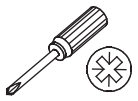

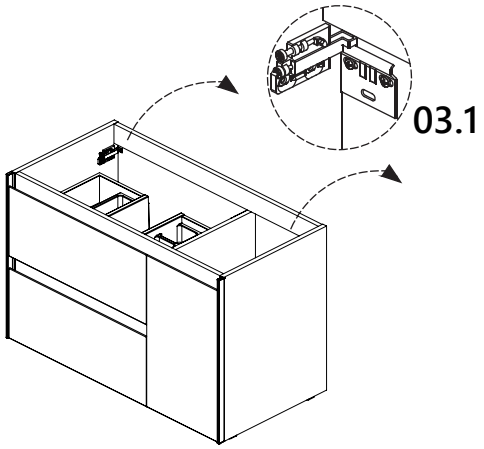

03.1

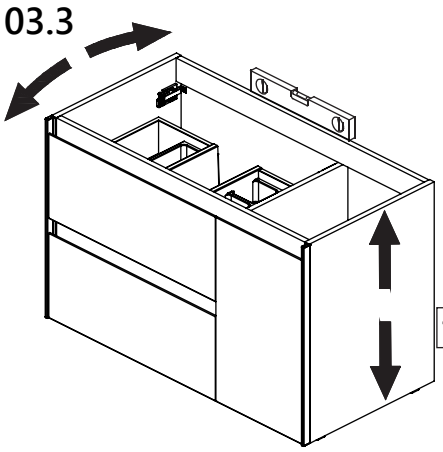

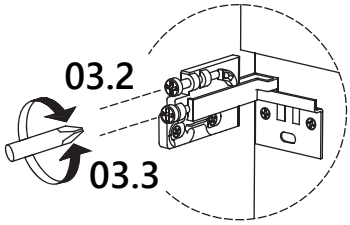

04.

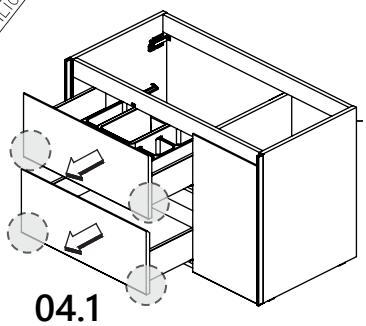

04.1

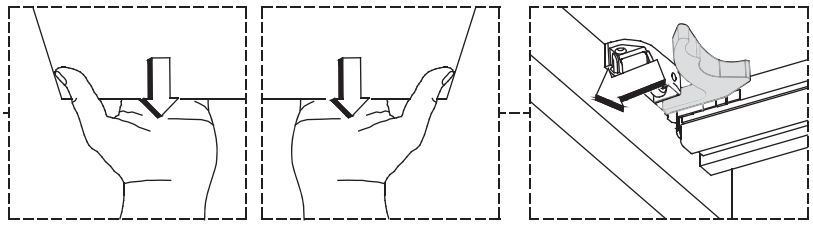

04.2 04.3

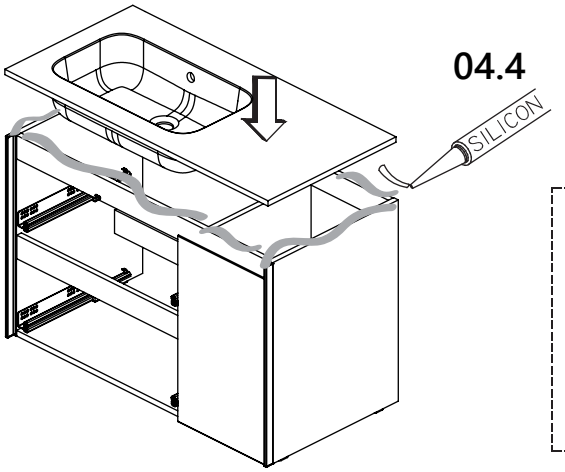

04.4

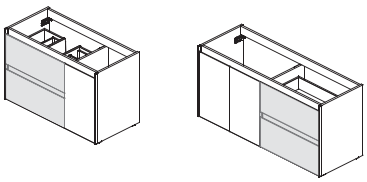

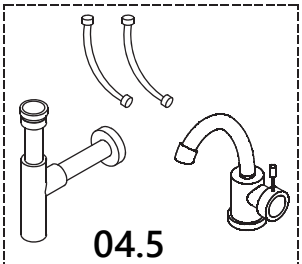

04.5

05.

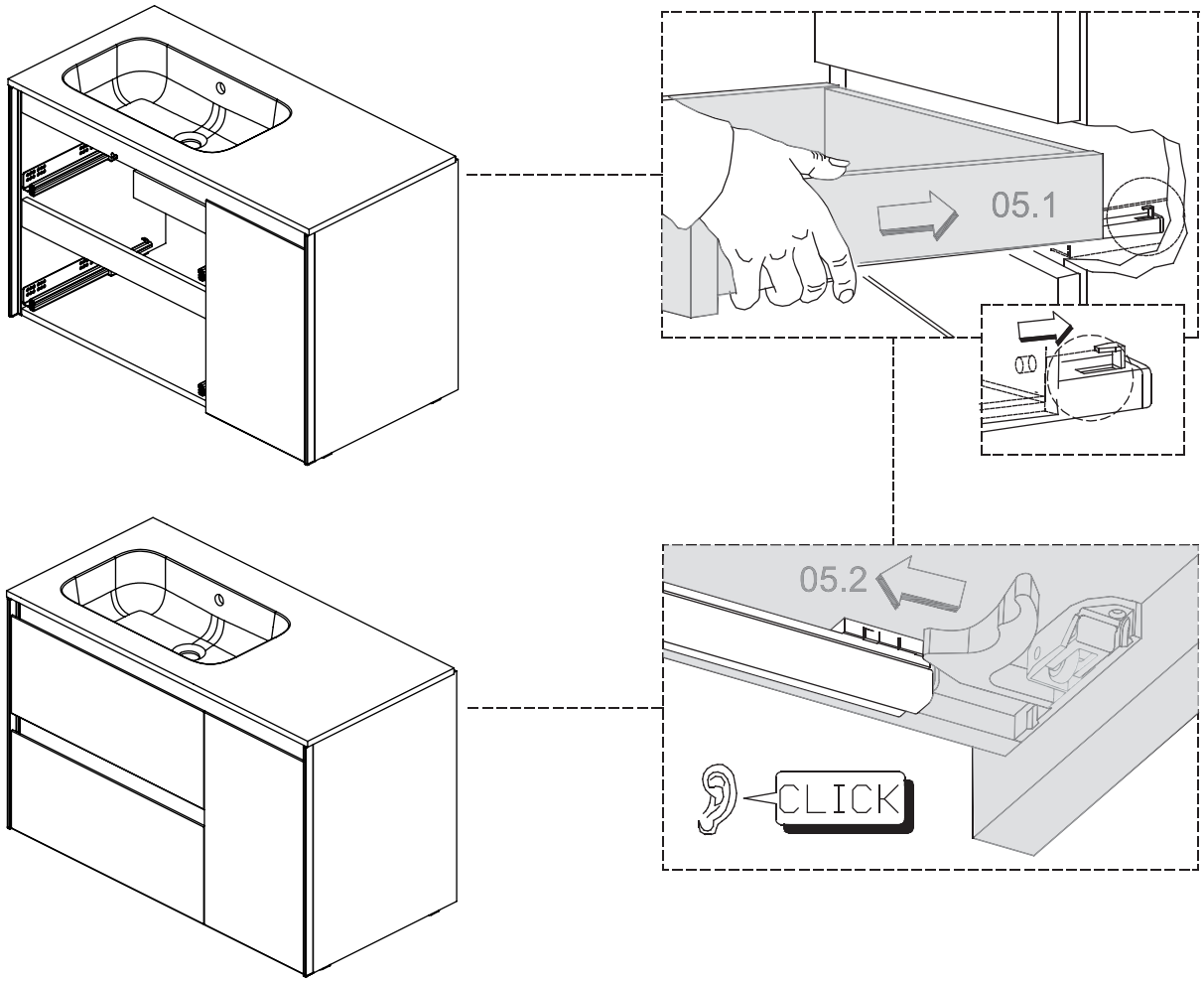

06.

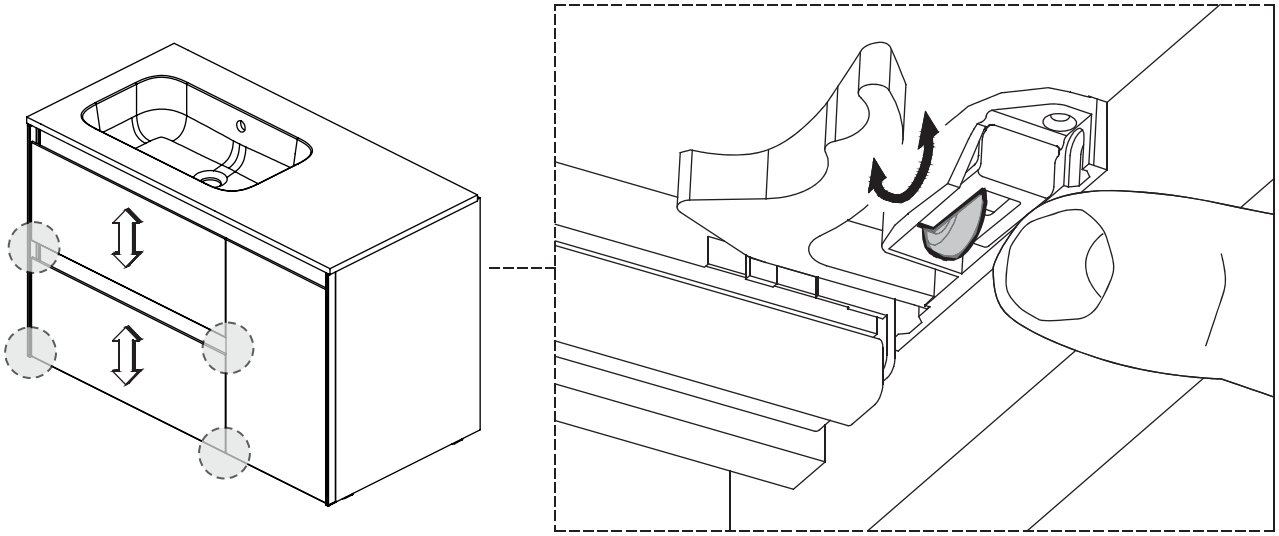

07.

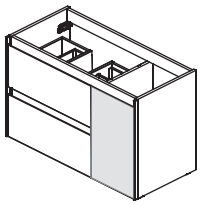

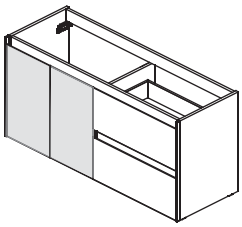

07.1

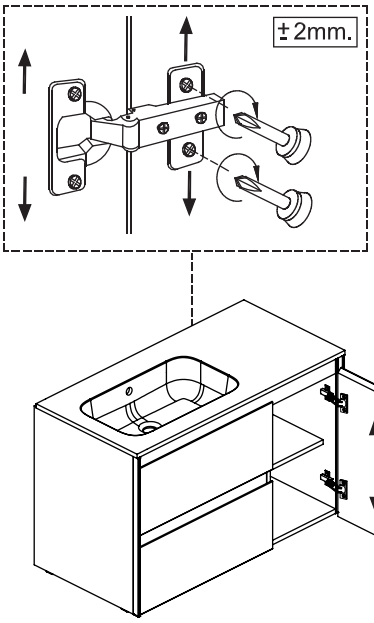

07.2

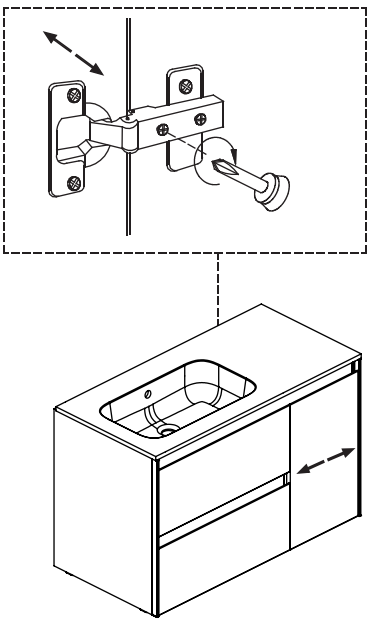

07.3

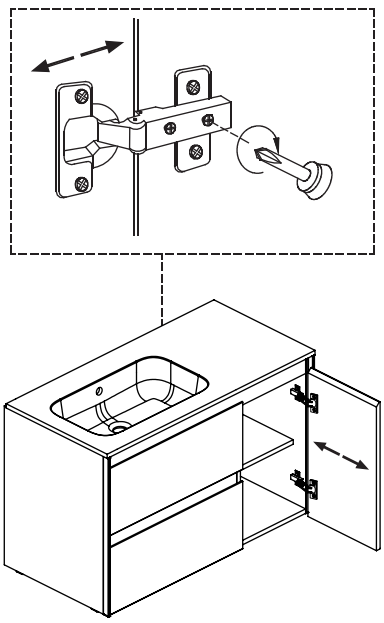

07.4

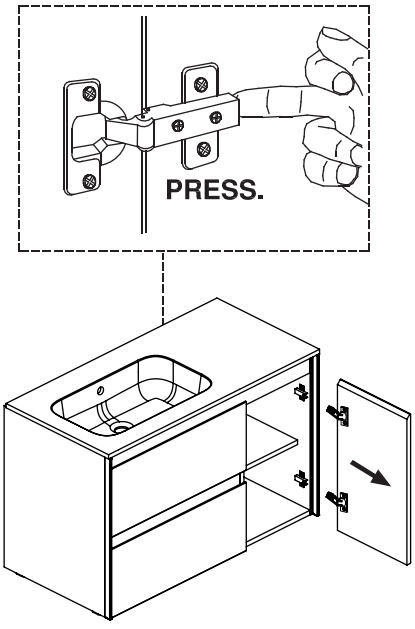

07.5

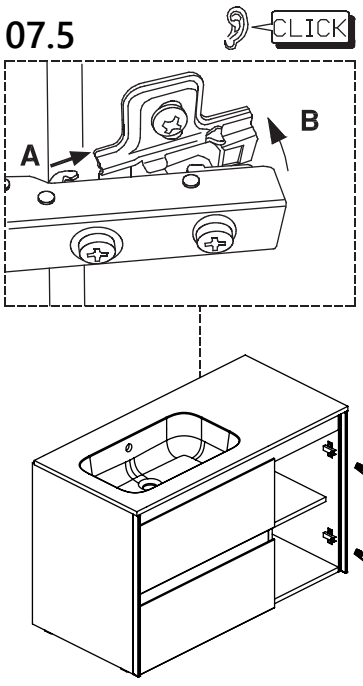

LOOK+

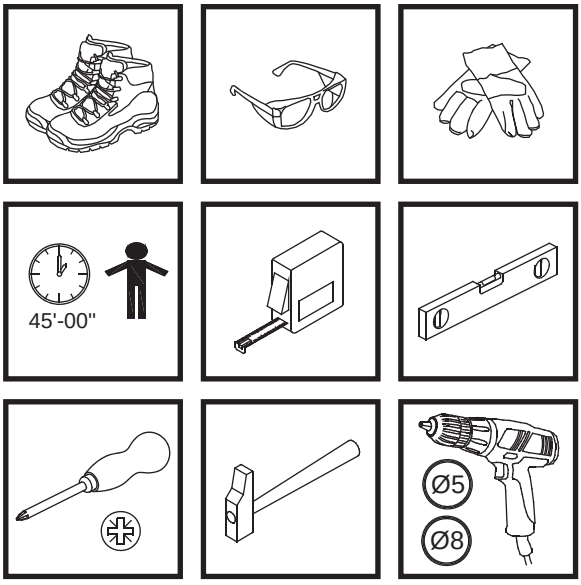

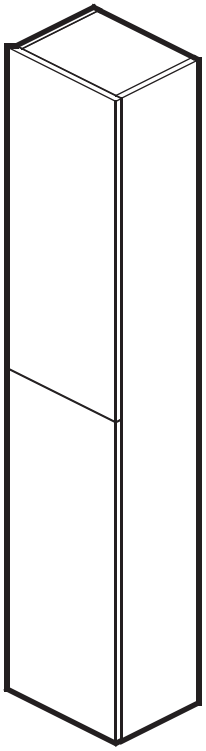

01.

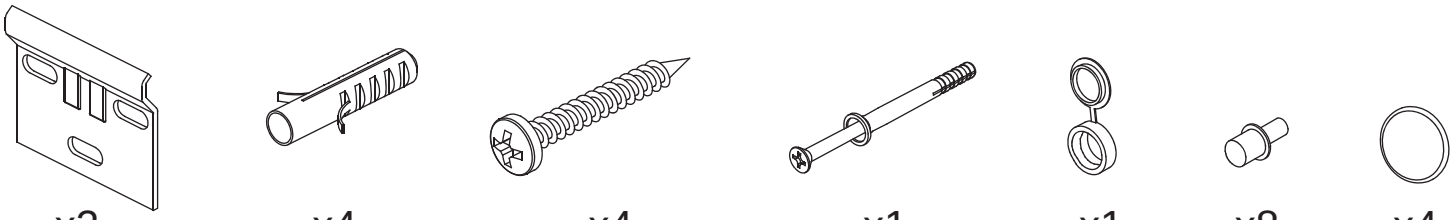

x2 x4 x4 x1 x1 x8 x4

BO-719 BO-630

02.

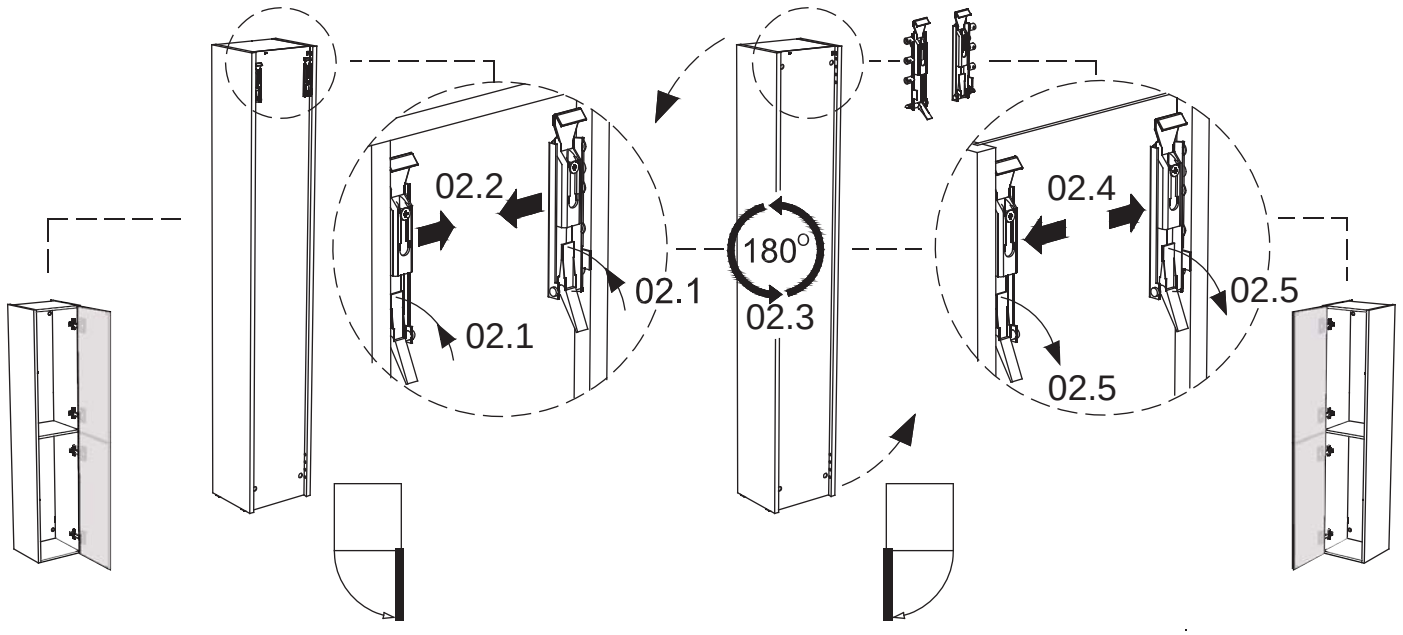

03.

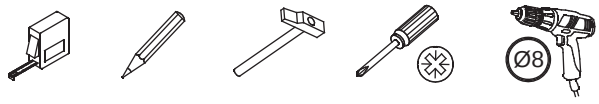
Ø8

x2
x4
x4

BO-719

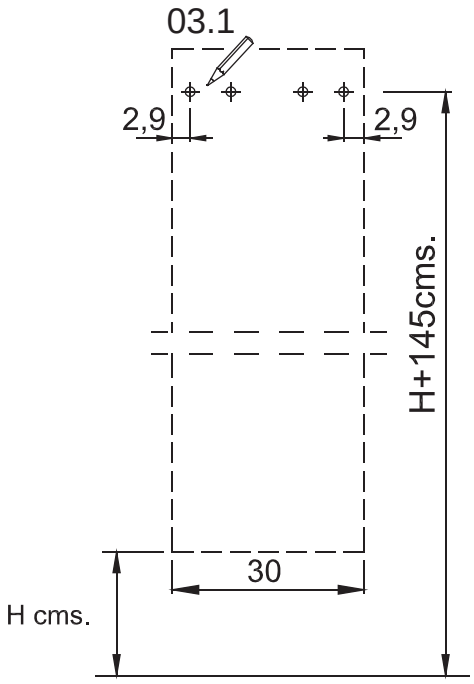
03.1
2,9
2,9
H+145cms.
30
H cms.

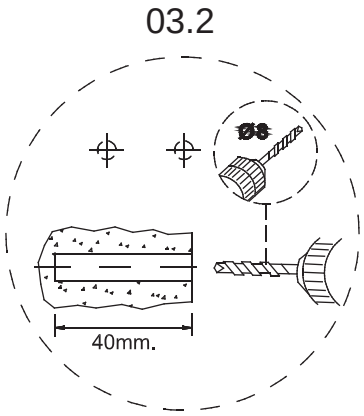
03.2
Ø8
40mm.

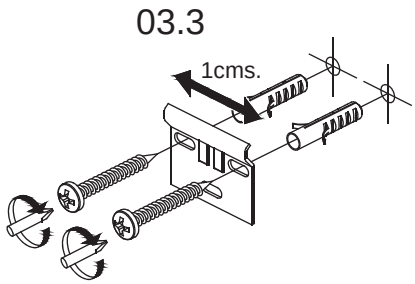
03.3
1cms.

04.

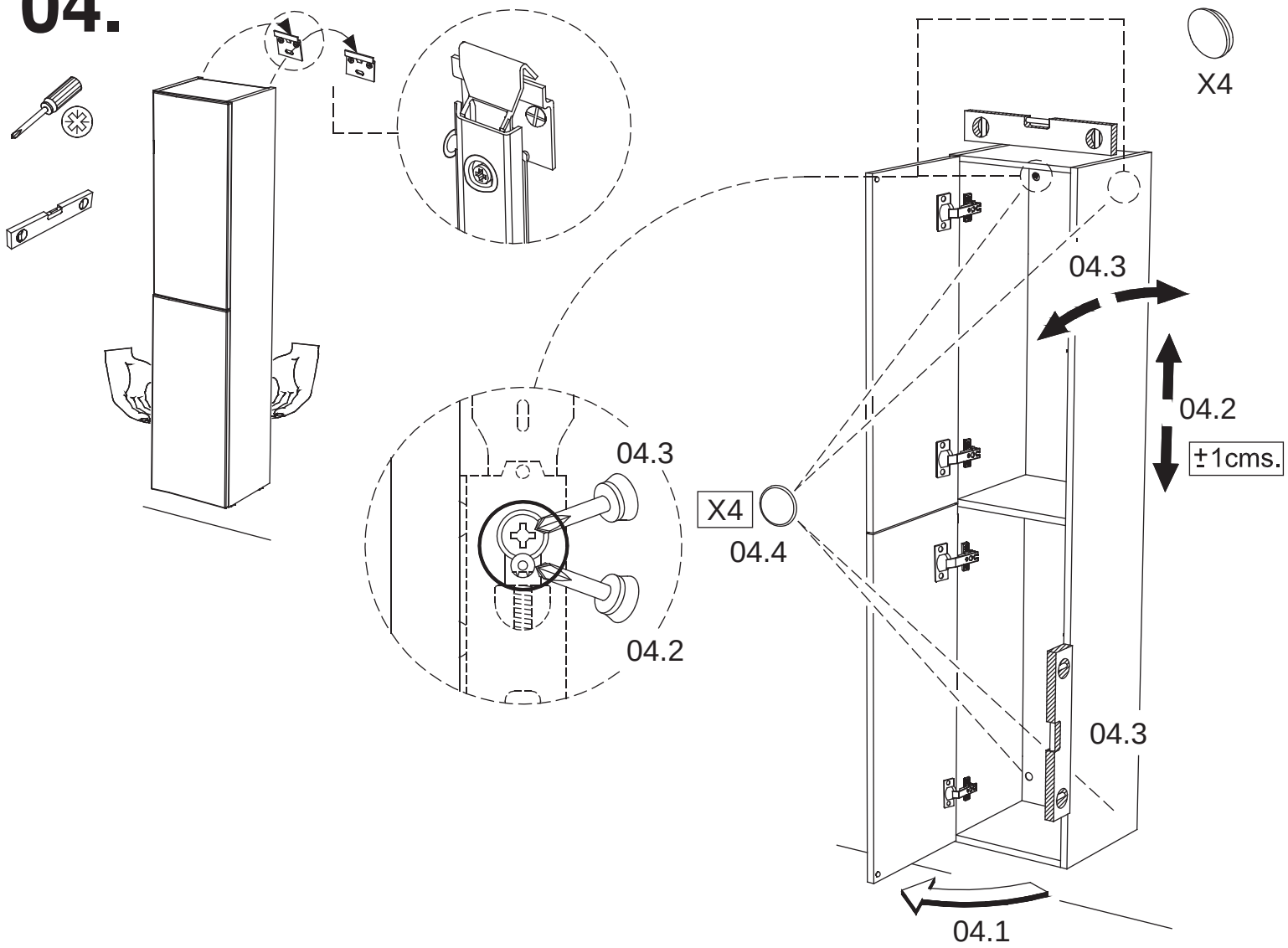
X4
04.3
04.2
±1cms.
X4
04.4
04.3
04.2
04.3
04.1

05.

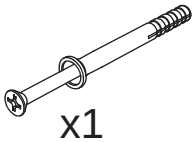

x1 x1

BO-630

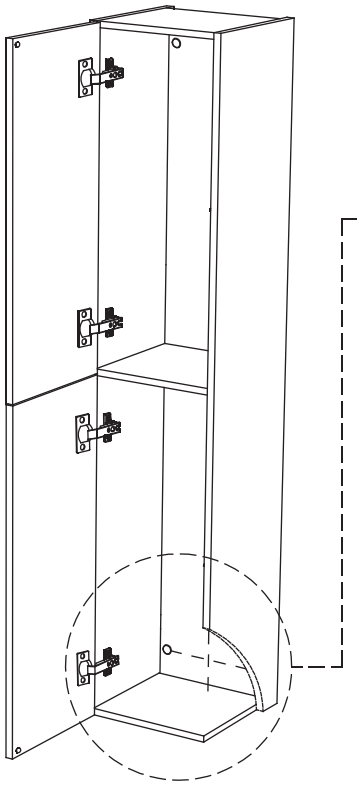

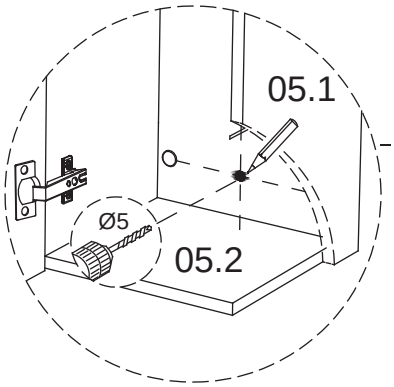

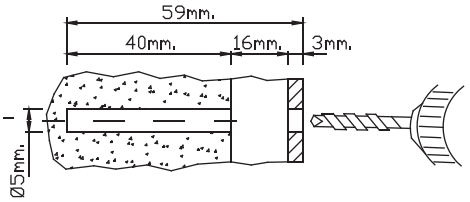

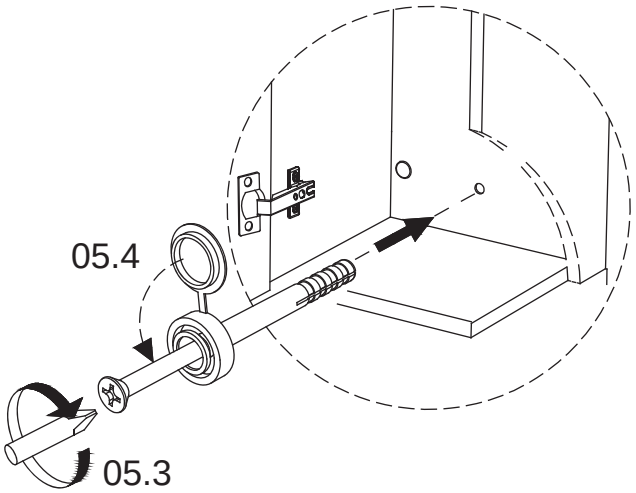

06.

x8

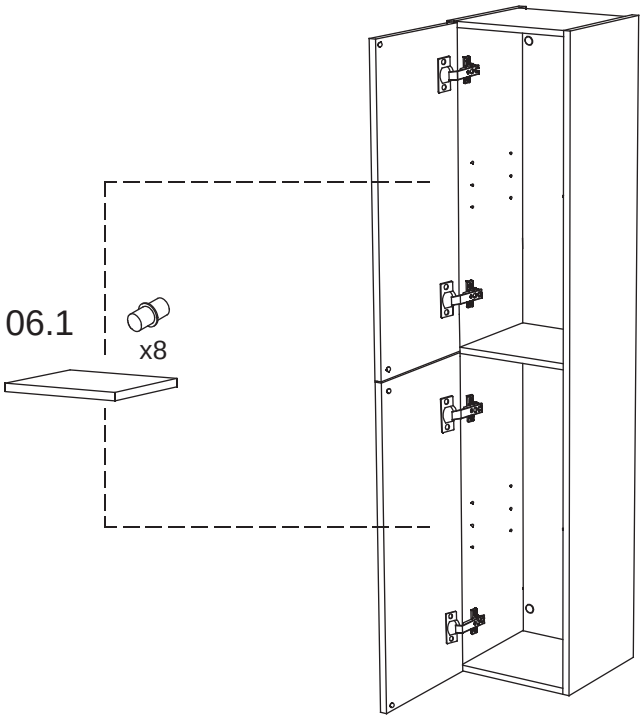

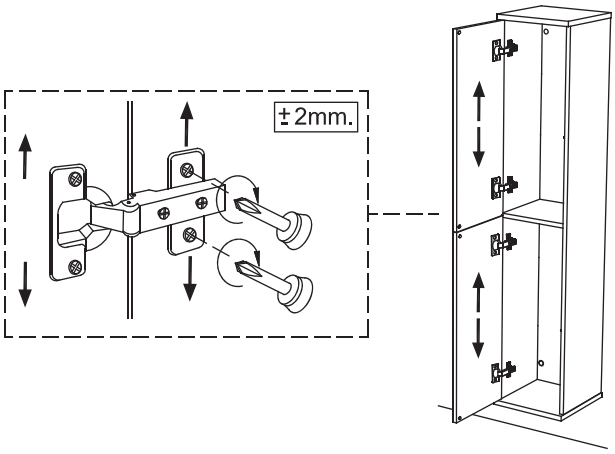
±2mm.

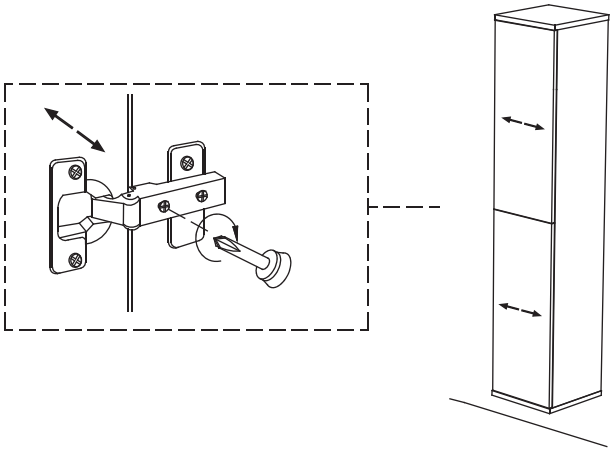

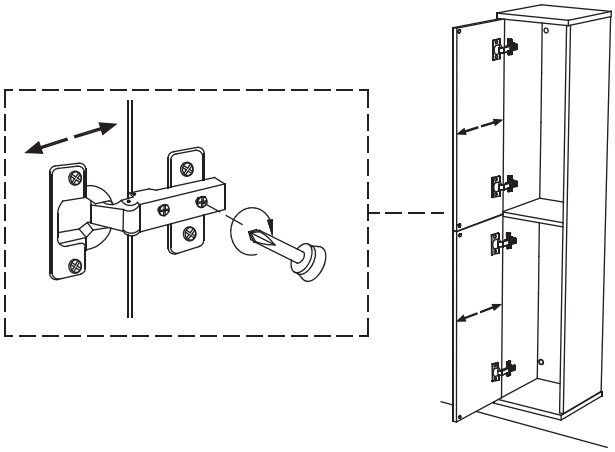

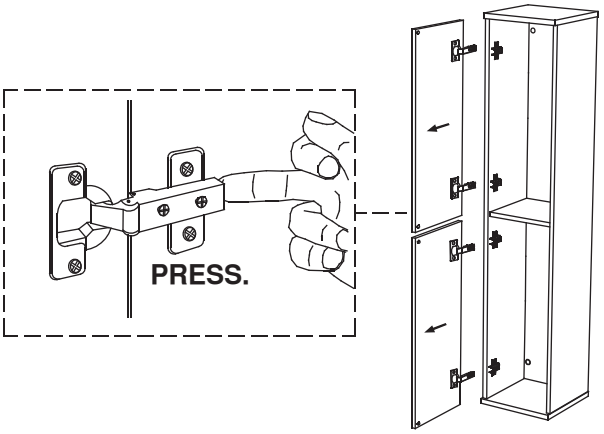
PRESS.

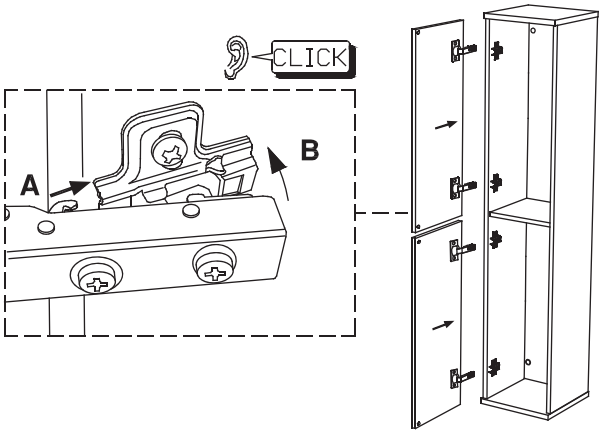
CLICK
A
B

STYLE

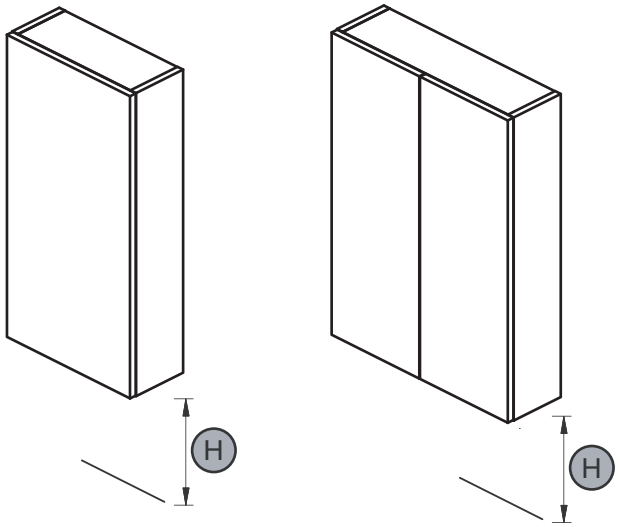
H
H

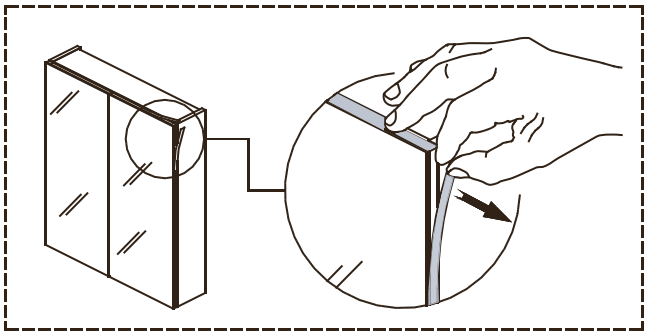

0-30'-00"

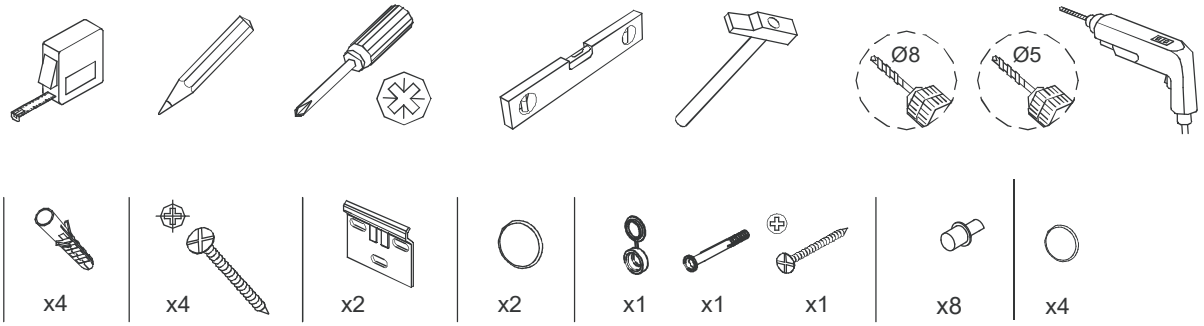
Ø8
Ø5
x4
x4
x2
x2
x1
x1
x1
x8
x4

01.

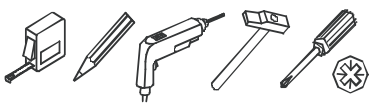

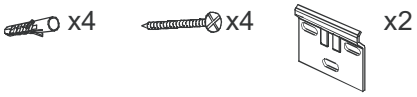
x4
x4
x2

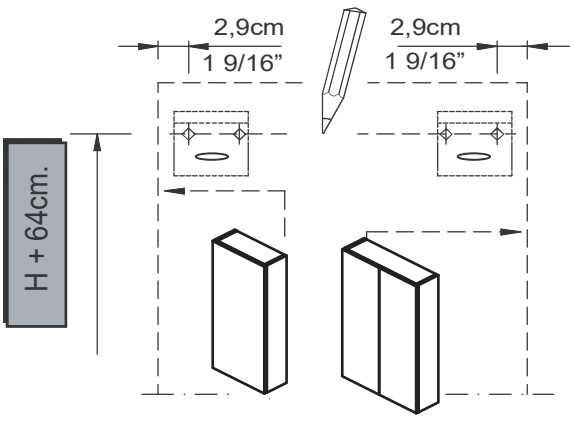
2,9cm
1 9/16”
2,9cm
1 9/16”
H + 64cm.

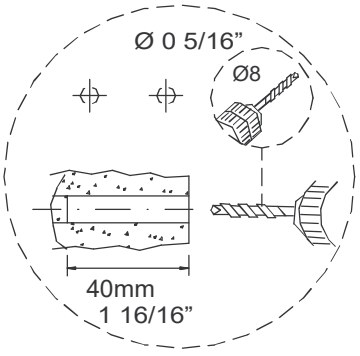
Ø 0 5/16”
Ø8
40mm
1 16/16”

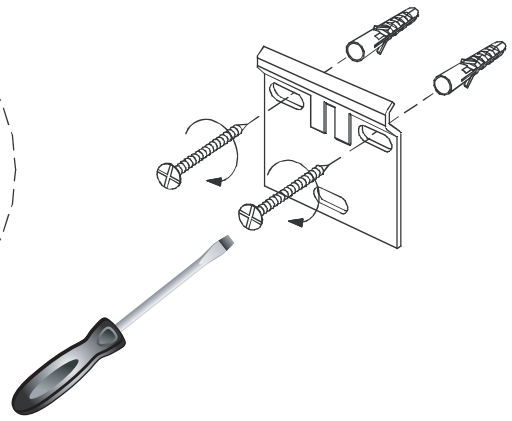

02.

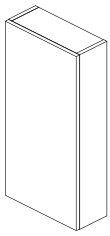

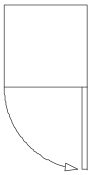

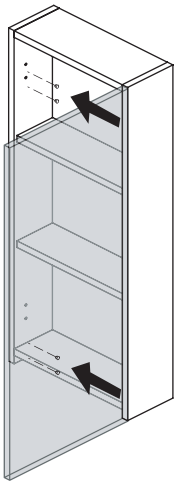

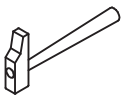

03.

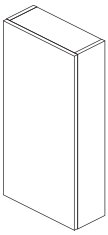

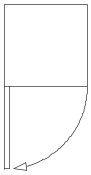

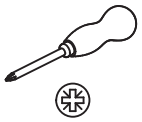

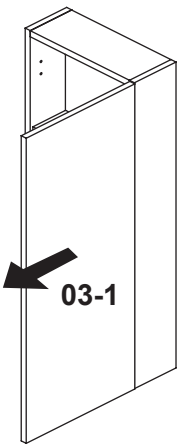

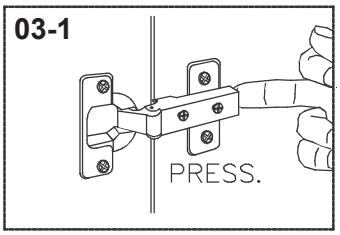

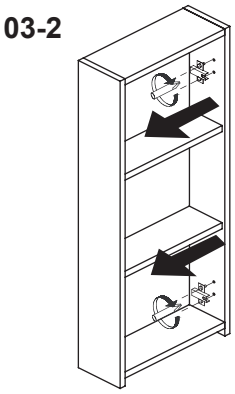

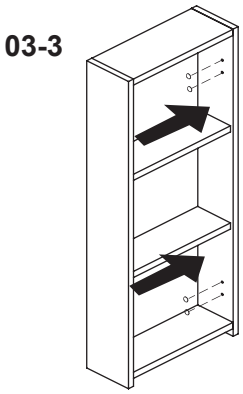

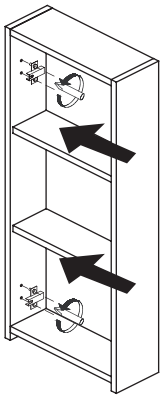

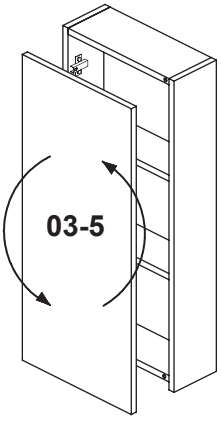

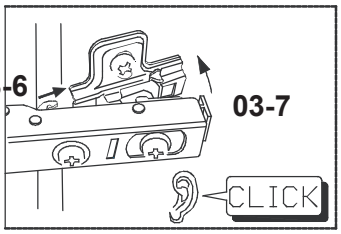

04.

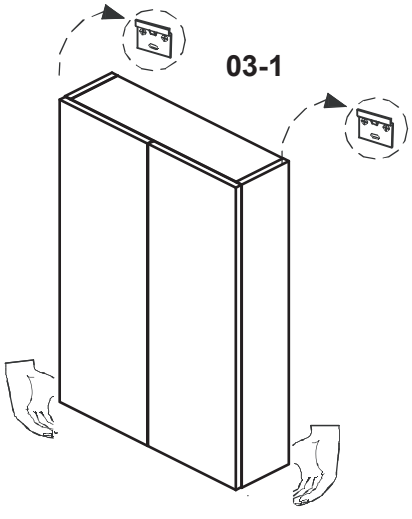

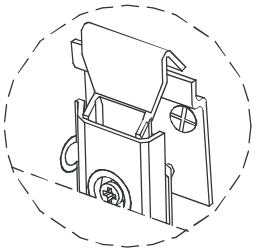

05.

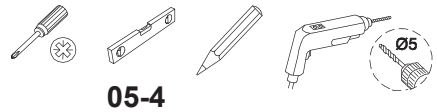
Ø5

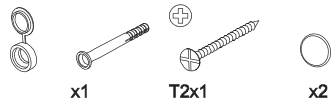
x1
x1
T2x1
x2

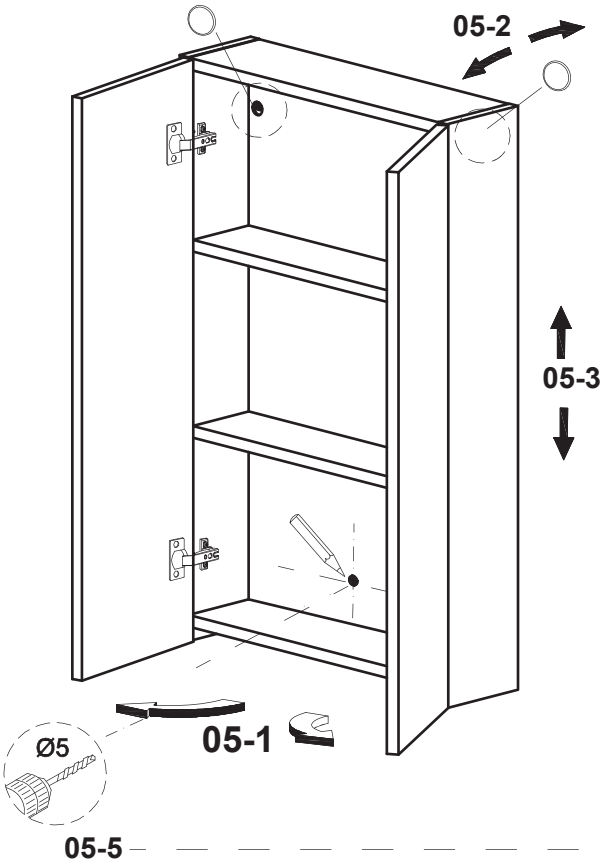
05-4
05-2
05-3
05-1
Ø5
05-5

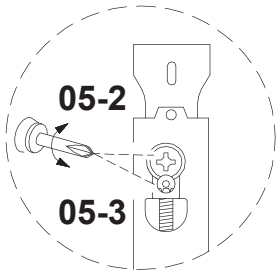
05-2
05-3

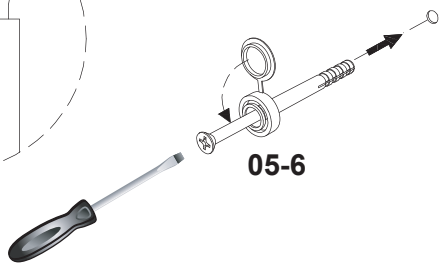
05-6

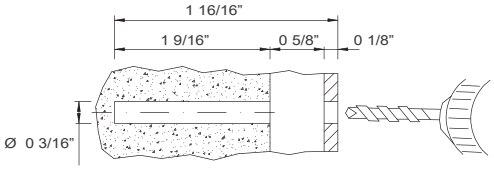
1 16/16"
1 9/16"
0 5/8"
0 1/8"
Ø 0 3/16"

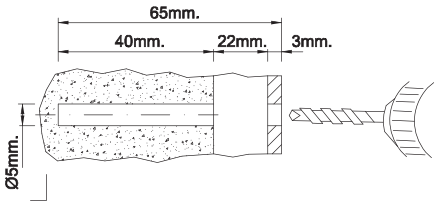
65mm.
40mm.
22mm.
3mm.
Ø5mm.

06.

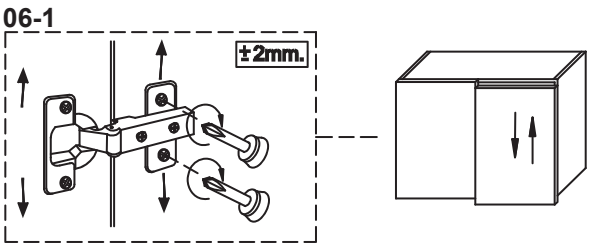
06-1
±2mm.

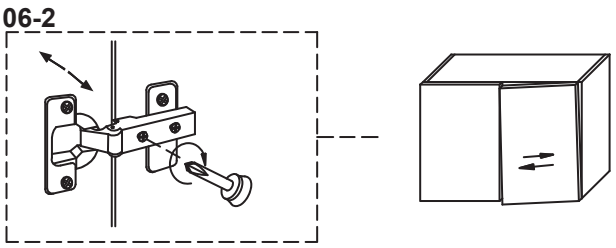
06-2

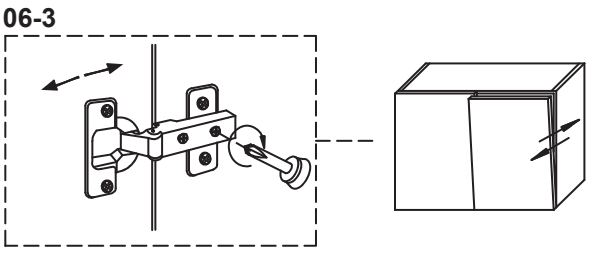
06-3

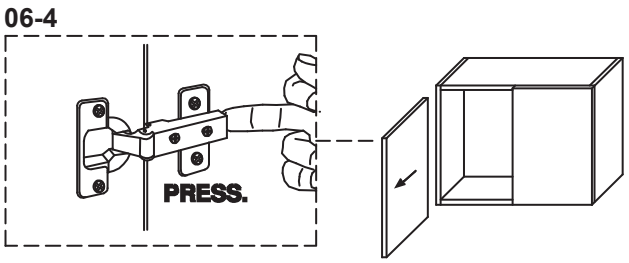
06-4
PRESS.

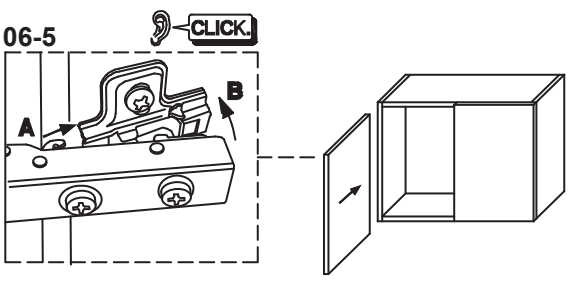
06-5
CLICK.
A
B